Design and Verification of Dual-Port RAM using SystemVerilog

(by CH.Anirudh)

1. Introduction:

In modern digital systems, efficient memory access is crucial for performance. **Dual-Port RAM (DPRAM)** is a type of memory that allows simultaneous read and write operations on two independent ports. Unlike single-port RAM, where only one operation (read/write) can occur at a time, **DPRAM enhances parallel processing** by enabling two processes to access memory concurrently.

This project implements a **synthesizable Dual-Port RAM in Verilog/SystemVerilog**, supporting simultaneous **read/write operations** with independent address buses, data buses, and control signals. The design is highly efficient for **high-speed computing applications, FPGA designs, and embedded systems.**

Through this implementation, we explore **memory arbitration techniques, conflict resolution strategies, and FPGA-based synthesis** to optimize DPRAM performance. The project includes **a fully functional testbench** for verification, ensuring correct read/write operations and data consistency.

2. Overview

Dual-Port RAM is essential in **multithreading, parallel processing, video processing, and networking hardware** where multiple processes need fast memory access. This project provides a parameterized DPRAM module, making it scalable for different memory sizes and architectures.

Key Features:

- Simultaneous Read/Write on two independent ports
- Asynchronous and Synchronous Support
- Conflict Resolution for Simultaneous Writes
- Scalable Design with Parameterized Address and Data Width
- Fully Verified Testbench in SystemVerilog

3. Difference Between Single-Port RAM and Dual-
3.1 Port RAM in Design and Verification

Single-Port RAM Design and Verification

A **Single-Port RAM** allows only one operation (either read or write) at a time. It consists of a **single address bus**, a **single data bus**, and a **control signal** (read/write enable). When a read or write request is made, the RAM processes it sequentially, meaning no two operations can occur at the same time.

From a **design perspective**, single-port RAM is simpler, requiring fewer control signals and arbitration logic. It is typically implemented using **a single register array** and controlled using a clock-driven read/write mechanism.

During **verification**, the testbench primarily checks sequential access to memory, ensuring that:

- Data is written correctly and can be read back without corruption.
- The read and write operations do not overlap.
- Memory integrity is maintained throughout multiple clock cycles.

Fig(a): Single-Port RAM

3.2 Dual-Port RAM Design and Verification

A **Dual-Port RAM**, unlike single-port RAM, allows simultaneous **read and write** operations on two independent address buses. This means one port can be **writing data** while the other port is **reading from** or writing to a different location in the **memory**. This is useful in high-speed applications where parallelism is required.

From a design perspective, dual-port RAM includes **two address buses, two data buses, and two independent control signals**. Additional logic is required for handling simultaneous writes to the same memory **location** (conflict resolution). Arbitration techniques such as **priority-**based write handling or **clock cycle** separation are often implemented.

During verification, the testbench must ensure:

- Both ports can read and write without interfering with each other.
- Conflict resolution logic properly handles simultaneous writes.

- Data consistency is maintained even when accessed from two different locations.
- Performance under high-speed access patterns is validated.

Thus, single-port RAM is simpler but has access limitations, while dual-port RAM is more complex but significantly improves parallel memory operations.

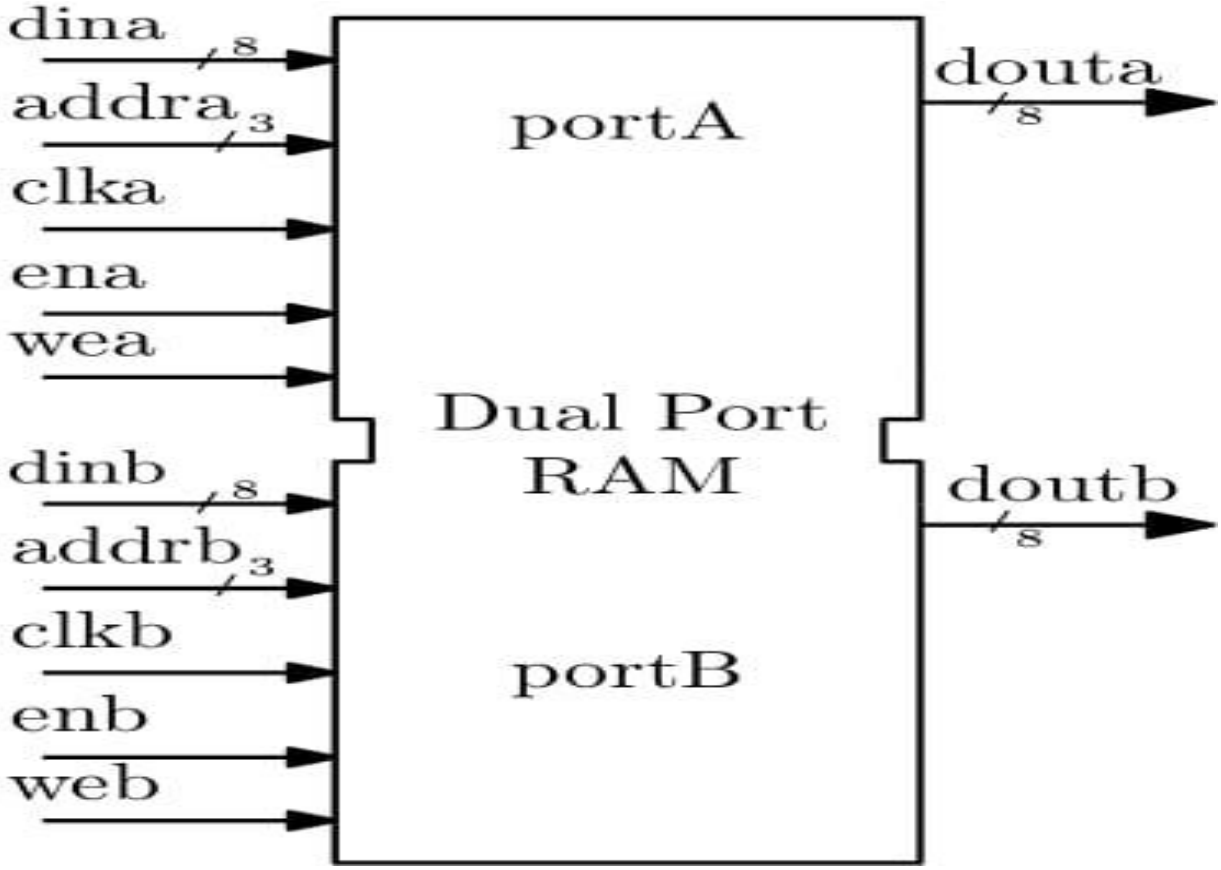

Fig (b): Dual-Port RAM

4.Design & Implementation of Dual-Port RAM

The **Dual-Port RAM** is designed using Verilog/SystemVerilog, with two separate **read/write ports** that can access memory simultaneously. The design includes:

Implementation Highlights:

- **Memory Array Implementation:** reg [DATA_WIDTH-1:0] memory [0:MEM_DEPTH-1];
- **Two Independent Ports:** Separate address, data, and control line
- **Conflict Handling:** Priority-based arbitration for write conflicts

- **Synchronous & Asynchronous Read Support**

Functional Block Diagram:

1. **Port A** → Read/Write Access
2. **Port B** → Read/Write Access
3. **Arbitration Logic** → Resolves conflicts
4. **Memory Array** → Stores data

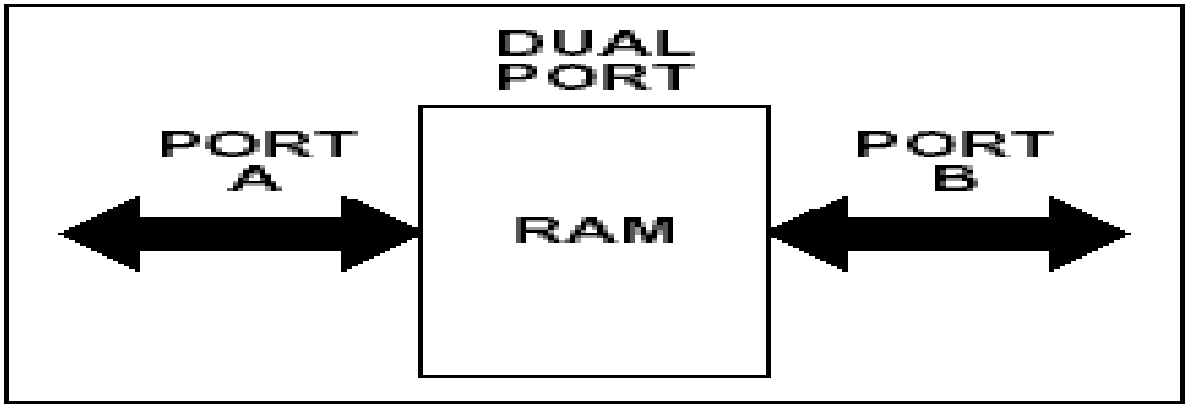

Fig(c): Dual-Port

5. SystemVerilog Implementation:

RTL code:

```
module dual_port_ram2#(
    parameter int DATA_WIDTH = 8,  // data width per memory allocation
    parameter int ADDR_WIDTH = 4)  // address width (total locations = 2^ ADDR_WIDTH)
    (
  input logic clk,    //clock signal
  input logic rst,   // reset signal
  input logic we_a,we_b, // write enable signals for port A and PORT B
  input logic [ADDR_WIDTH-1:0] addr_a,addr_b,    // adrress inputs
  input logic [DATA_WIDTH-1:0] din_a,din_b,      // data inputs for write operations
  output logic [DATA_WIDTH-1:0] dout_a,dout_b    // dtat inputs for read operations
  );
   // memory declaration: 2D array with 2^ ADDR_WIDTH locations, each storing
DATA_WIDTH bits
```

```
logic [DATA_WIDTH-1:0] mem [0:(1<<ADDR_WIDTH)-1];
//pipe line registers for read operations(improves the performance)
logic [DATA_WIDTH-1:0] dout_a_reg,dout_b_reg;
//conflict resolution flag
logic conflict;
assign dout_a = mem[addr_a];
assign dout_b = mem[addr_b];
//conflict detection (both ports writing the same address)
assign conflict = we_a && we_b && (addr_a == addr_b);
//sequential logic for write operation and conflict resolution

always_ff @(posedge clk or posedge rst) begin
 if (rst) begin
  // Initialize memory and outputs on reset
      for (int i = 0; i < (1 << ADDR_WIDTH); i++)
          mem[i] <= '0;
  dout_a_reg <= '0;
  dout_b_reg <= '0;
 end else begin
   if (conflict) begin  //if both ports writes a same address, prioritize portA
    mem[addr_a] <= din_a;
   end else begin
    if(we_a) mem[addr_a] <= din_a; // write by port A
    if(we_b) mem[addr_b] <= din_b; // write by port B
   end
    dout_a_reg <= mem[addr_a]; //pipelined read for port A
    dout_b_reg <= mem[addr_b]; //pipelined read for port b
 end
```

```
    end
    //assign pipelined outputs
    assign dout_a = dout_a_reg;
    assign dout_b = dout_b_reg;



endmodule
```

6. Testbench Simulation:

```
module dual_port_ram2_tb;
   //parameters
        parameter int DATA_WIDTH = 8;
        parameter int ADDR_WIDTH = 4;
        // signals
   logic clk;
   logic rst;
   logic we_a, we_b;
   logic [ADDR_WIDTH-1:0] addr_a,addr_b;
   logic [DATA_WIDTH-1:0] din_a,din_b;
   logic [DATA_WIDTH-1:0] dout_a,dout_b;
   //instantiate the dual port ram module
    dual_port_ram2 #(
     .DATA_WIDTH(DATA_WIDTH),
     .ADDR_WIDTH(ADDR_WIDTH)
    )uut(
     .clk(clk),
     .rst(rst),
     .we_a(we_a),
     .we_b(we_b),
     .addr_a(addr_a),
     .addr_b(addr_b),
     .din_a(din_a),
     .din_b(din_b),
     .dout_a(dout_a),
     .dout_b(dout_b)
     );
     //clock generation
```

```
        always begin
 #5 clk =~clk;    //toggle clk every 5 time units
end
//test sequence
initial begin
  clk = 0;
  rst = 0;
  we_a = 0;
  we_b = 0;
  addr_a = 0;
  addr_b = 0;
        din_a = 0;
  din_b = 0;
 //apply reset
 $display("applying reset...");
 rst = 1;   //asserting the reset
 #10;
 rst = 0;   //deasserting the reset
 //test write operation-port A
 $display("writing to port A...");
 we_a = 1; we_b = 0; //enable port A only
 addr_a = 4'b0001;   // write address
 din_a = 8'hAA;     // data to write
 #10;
 we_a = 0;         //disable write
 #10;
 $display ("dout_a = %h (expected:00)",dout_a);    //read the value back, should
be zero initially
 #10;
 //test write operation port-B
 $display ("writing to port B...");
      we_a = 0; we_b = 1;     // enable write for port B only
      addr_b = 4'b0010;      //write address
      din_b = 8'hBB;         //data to write
      #10;
      we_b = 0;              //disable write
      #10;
 $display ("dout_b = %h (expected:00)", dout_b);  //read the value back, should
be zero initially

 //test the simultaneous write(conflict resolution)
 $display("simultaneous write to same adress...");
 we_a = 1; we_b = 1;   //enable write to both ports
 addr_a = 4'b0011;     // same address for both
```

```
            addr_b = 4'b0011;     //same address for both
        din_a = 8'hCC;       //port A wires to hCC
        din_b = 8'hDD;       //port B wires to hDD
        #10;
        we_a = 0; we_b = 0;  //disable wires
        #10;
        $display("memory at addr 3 = %h (expected: CC)", uut.mem[3]); //check value
at adress 3,should becc at prioriy of port A
        //test asynchronous read-port A and B
        $display("reading asynchronously...");
        addr_a = 4'b0001;   //set address for port A
        addr_b = 4'b0010; //set address for port B
        #10;
        $display("dout_a = %h (expected: AA), dout_b = %h(expected: BB)",
dout_a,dout_b); //should dhoe data earlier to those adsress
        //test pipelined access
        $display ("testing pipelined access...");
        addr_a = 4'b0001;
        addr_b = 4'b0010;
        din_a = 8'h55;
        din_b = 8'h66;
        we_a = 1; we_b  = 1;
        #10;
        $display("dout_a = %h (expected: 55),dout_b = %h (expected: 66)",
dout_a,dout_b); //output should the data written with one clock delay
        //end simulation
        $finish;
    end
endmodule
```

7.Elaboration Design:

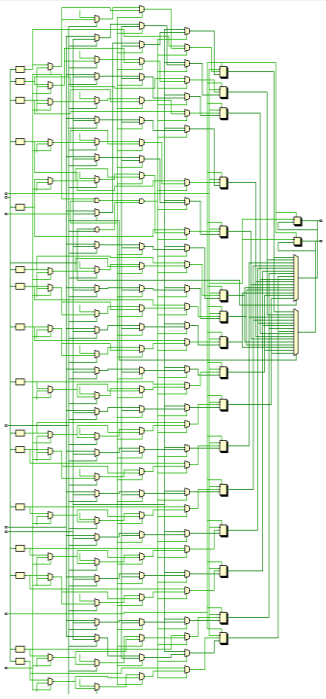

Fig(d): elaborated design

8.Simulation:

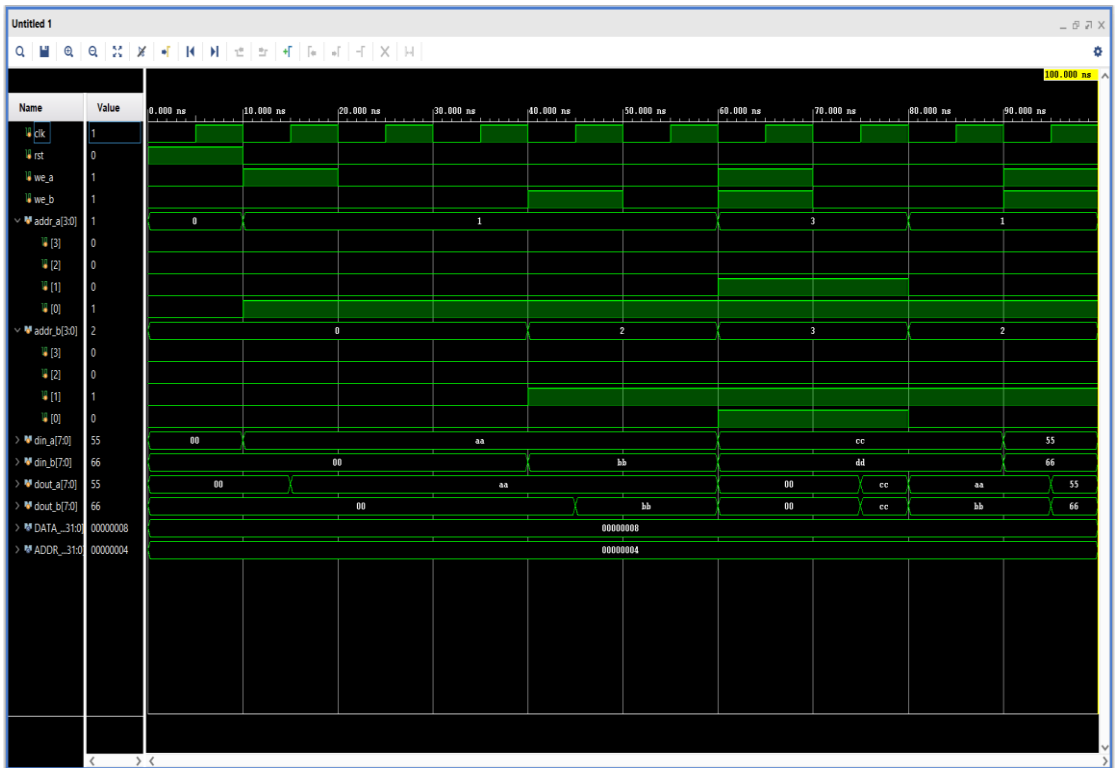

Fig(e): Simulation Design

9.Synthesis:

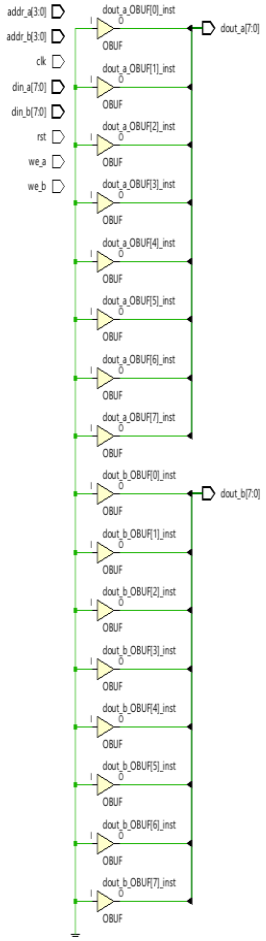

Fig(F): Synthesis design

10. Advantages:

- **High Performance** – Enables parallel processing by supporting concurrent memory accesses.
- **Reduced Latency** – Eliminates bottlenecks by allowing independent read/write operations.
- **Improved FPGA Resource Utilization** – Optimized for real-time embedded applications.

Disadvantages:

- **Increased Complexity** – Requires additional logic for arbitration and conflict resolution.

- **Higher Power Consumption** – Simultaneous operations increase dynamic power usage.
- **Resource Intensive** – Utilizes more FPGA resources compared to single-port RAM.

11. Applications:

- **FPGA-Based Processors** – Used in multi-core architectures for fast data sharing.
- **Networking & Communication Systems** – Enhances router and switch performance.
- **Video Processing** – Supports parallel pixel processing for real-time applications.
- **Embedded Systems** – Efficient memory management for microcontroller-based designs.

12. Conclusion:

The **Dual-Port RAM** is a powerful memory design that enhances system efficiency by enabling simultaneous data access. Its implementation in Verilog/SystemVerilog makes it suitable for **FPGA-based applications, multi-threaded processors, and high-speed digital circuits**. By incorporating conflict resolution strategies and parameterized configurations, this project provides a **scalable, optimized, and functional memory solution**.

---The End---